LEDWIDE
LEDWIDE LIGHTING CO.,LTD

Tel: 0086 755 29362351 Direct: 0086 0 18680360436
Fax: 86 755 29014058 E-mail: info@ledwide.com
www.ledwide.com
Address:1-2/F, Building A2,Sinopol Ind.Park, First Industrial Zone, BaiHua communities, Guangming New District, Shenzhen, P.R. China Postcode: 518107

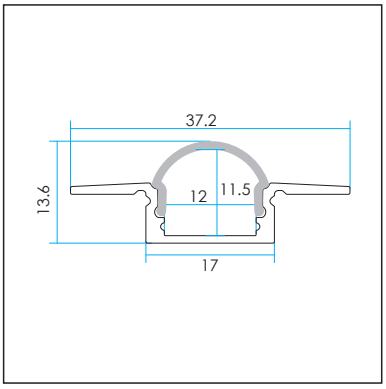

Unit:mm

Aluminium LED Profile
LW-ART1

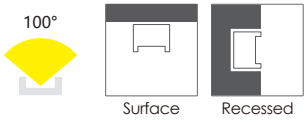

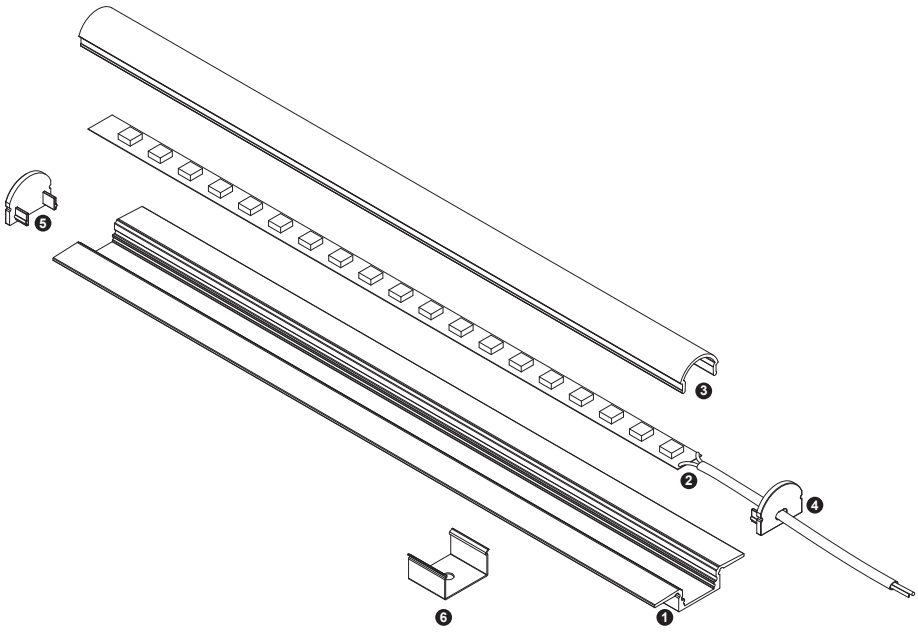

	Name	Code	Material	Color	Others
❶	Aluminum Profile	ART1	Aluminum	Silver / White / Black / RAL color	
❷	LED strip	-	-	-	MAX. 14.4 W/m
❹	Endcap (with hole)	AL60-Cap-H	Plastic	Grey / White / Black	-
❺	Endcap (without hole)	AL60-Cap	Plastic	Grey / White / Black	-
❻	Metal Clip	AS1-Clip-M	Stainless Steel	ecru	-

❸ Optional Diffuser(PMMA)

Color	Light Transmittance	Code
-	-	-
Milky	60%	D009-M
-	-	-
Clear	95%	D009-C

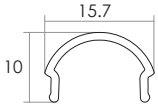

LEDWIDE
LEDWIDE LIGHTING CO.,LTD

Tel: 0086 755 29362351 Direct: 0086 0 18680360436
Fax: 86 755 29014058 E-mail: info@ledwide.com
www.ledwide.com
Address:1-2/F, Building A2,Sinopol Ind.Park, First Industrial Zone, BaiHua communities, Guangming New District, Shenzhen, P.R. China Postcode: 518107

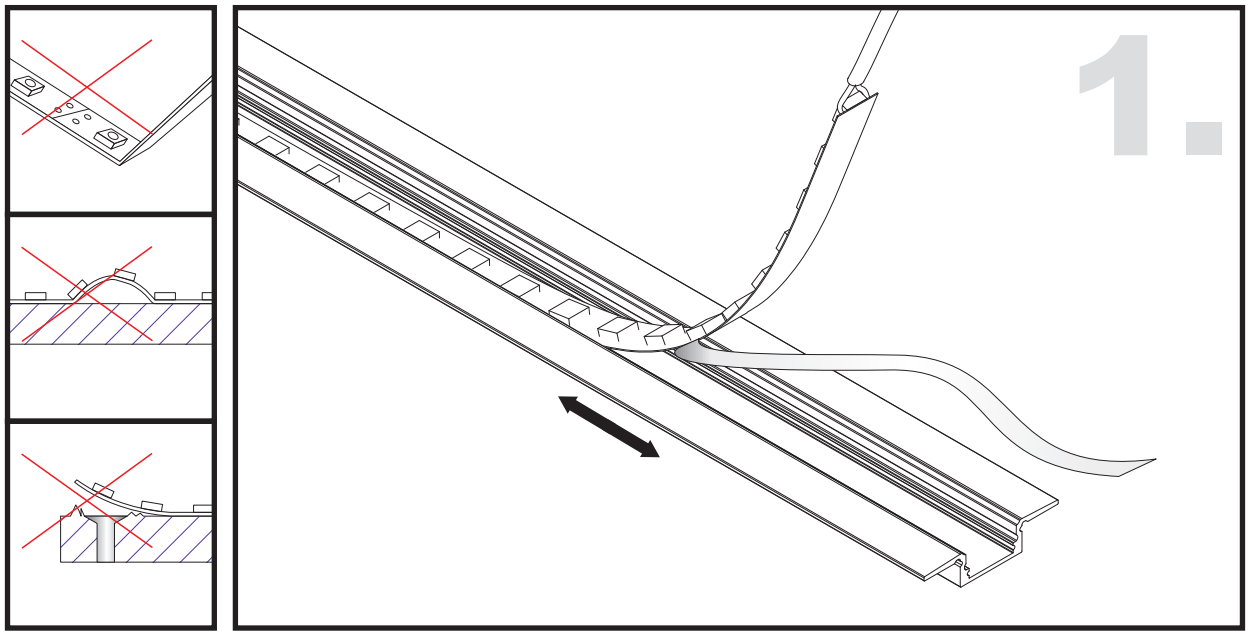

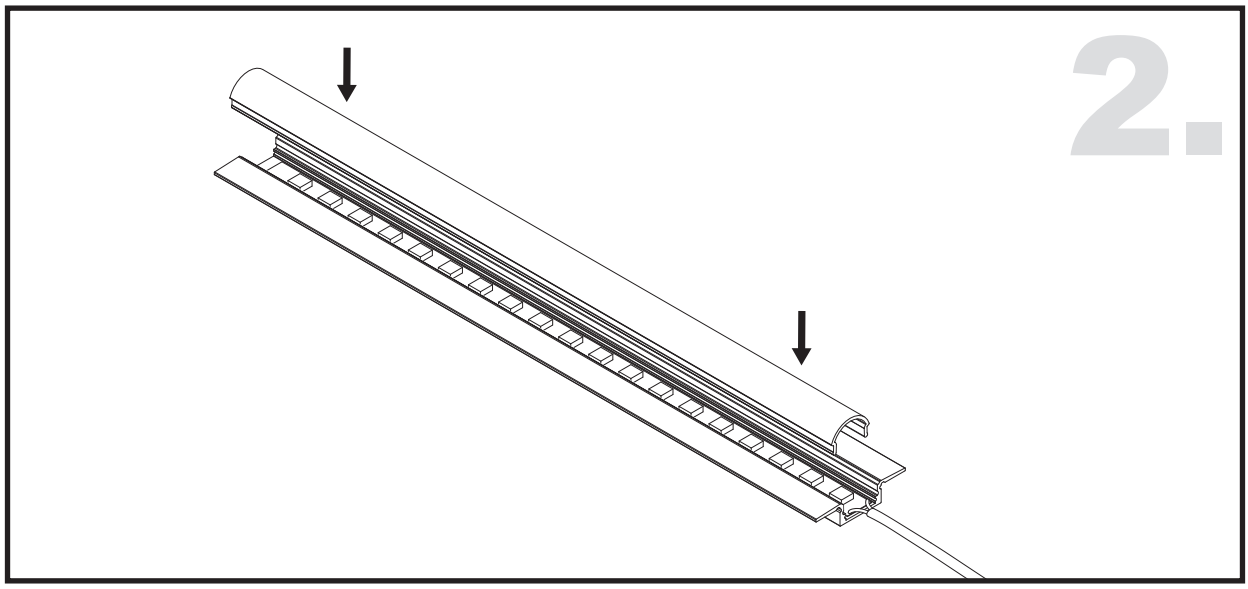

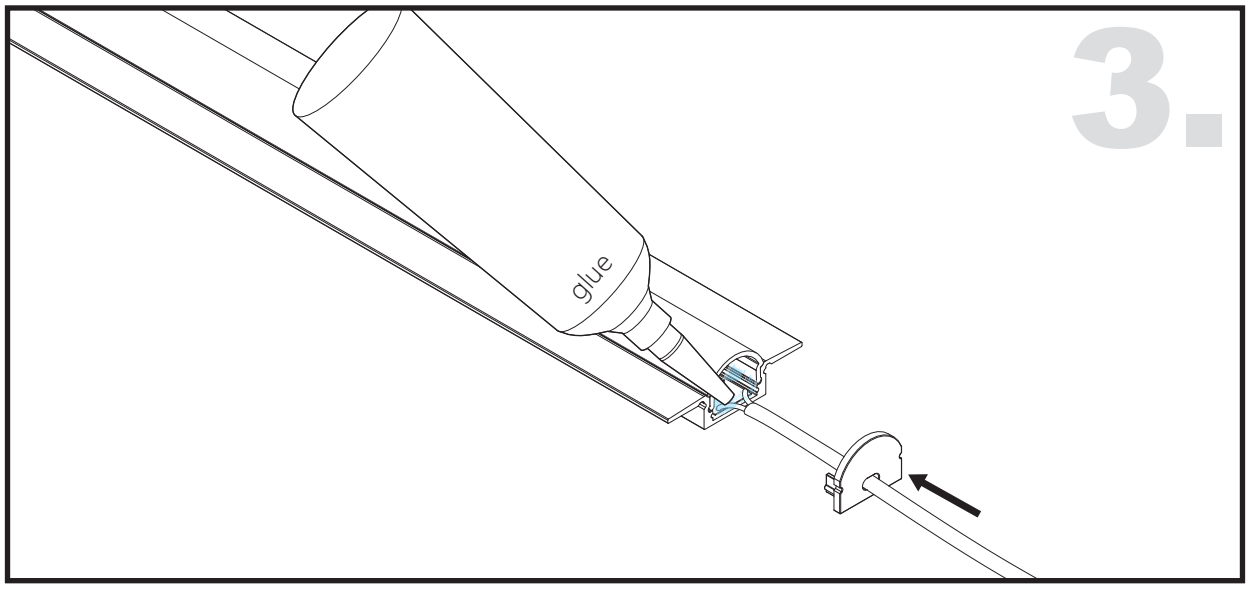

LEDWIDE
LEDWIDE LIGHTING CO.,LTD

Tel: 0086 755 29362351 Direct: 0086 0 18680360436
Fax: 86 755 29014058 E-mail: info@ledwide.com
www.ledwide.com
Address:1-2/F, Building A2,Sinopol Ind.Park, First Industrial Zone, BaiHua communities, Guangming New District, Shenzhen, P.R. China Postcode: 518107



Surface

METAL CLIP / PLASTIC CLIP INSTALLING INSTRUCTIONS

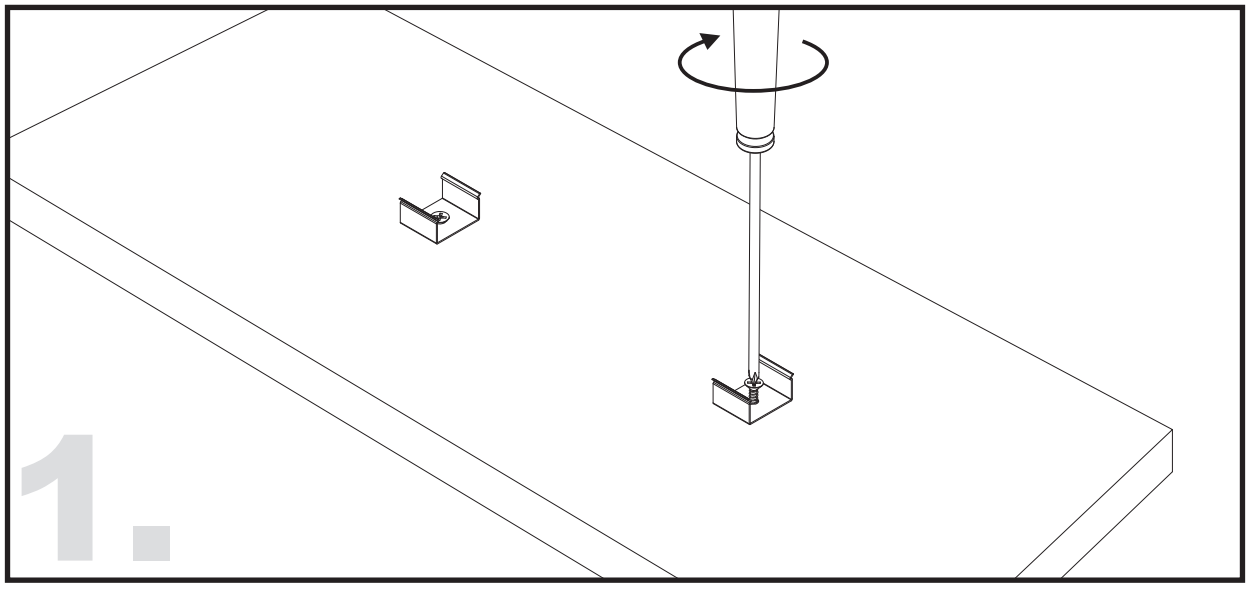

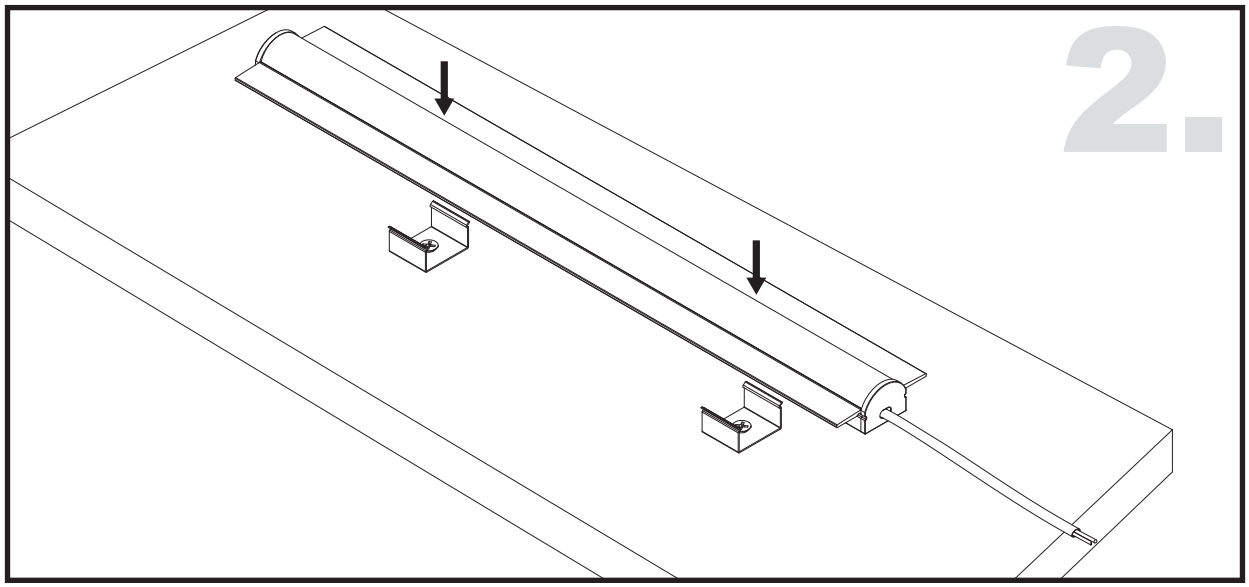

LEDWIDE
LEDWIDE LIGHTING CO.,LTD

Tel: 0086 755 29362351 Direct: 0086 0 18680360436
Fax: 86 755 29014058 E-mail: info@ledwide.com
www.ledwide.com
Address:1-2/F, Building A2,Sinopol Ind.Park, First Industrial Zone, BaiHua communities, Guangming New District, Shenzhen, P.R. China Postcode: 518107



RECESSED INSTALLING INSTRUCTIONS

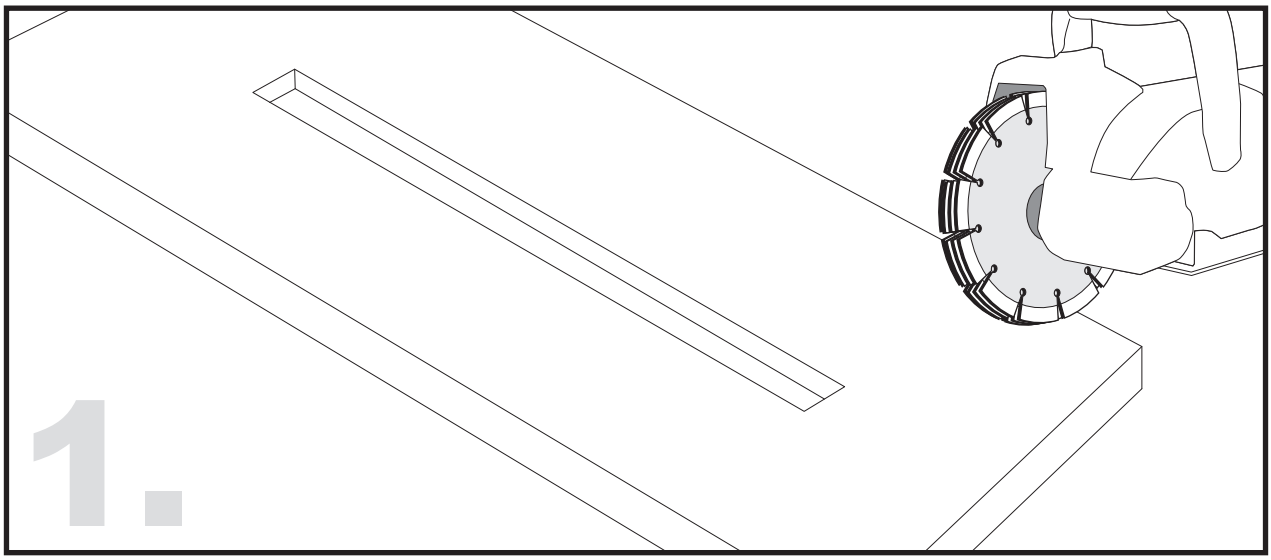

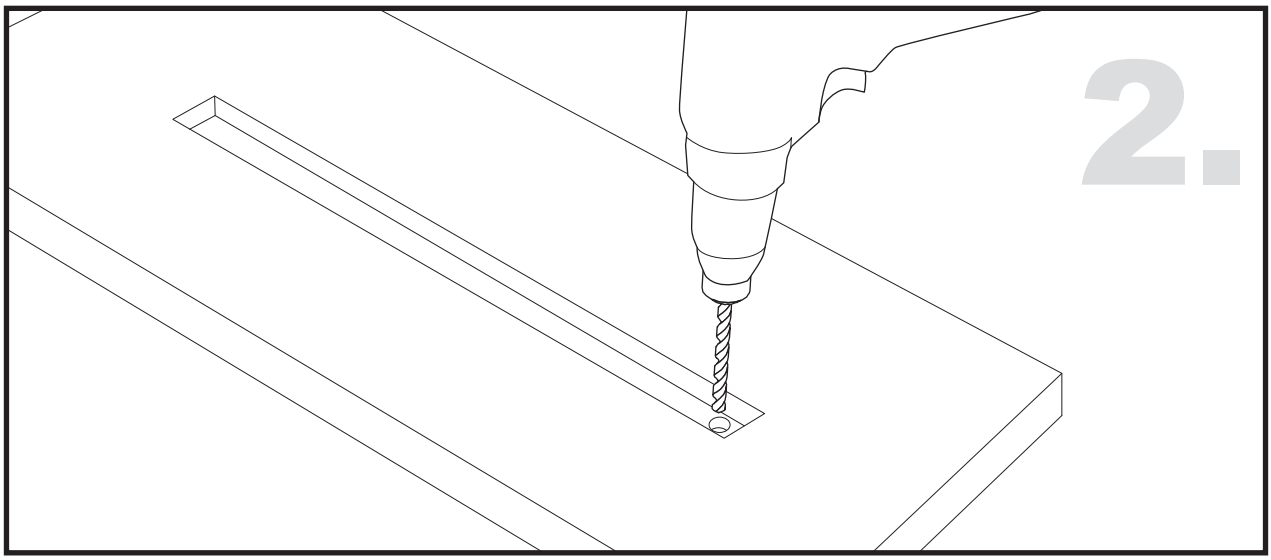

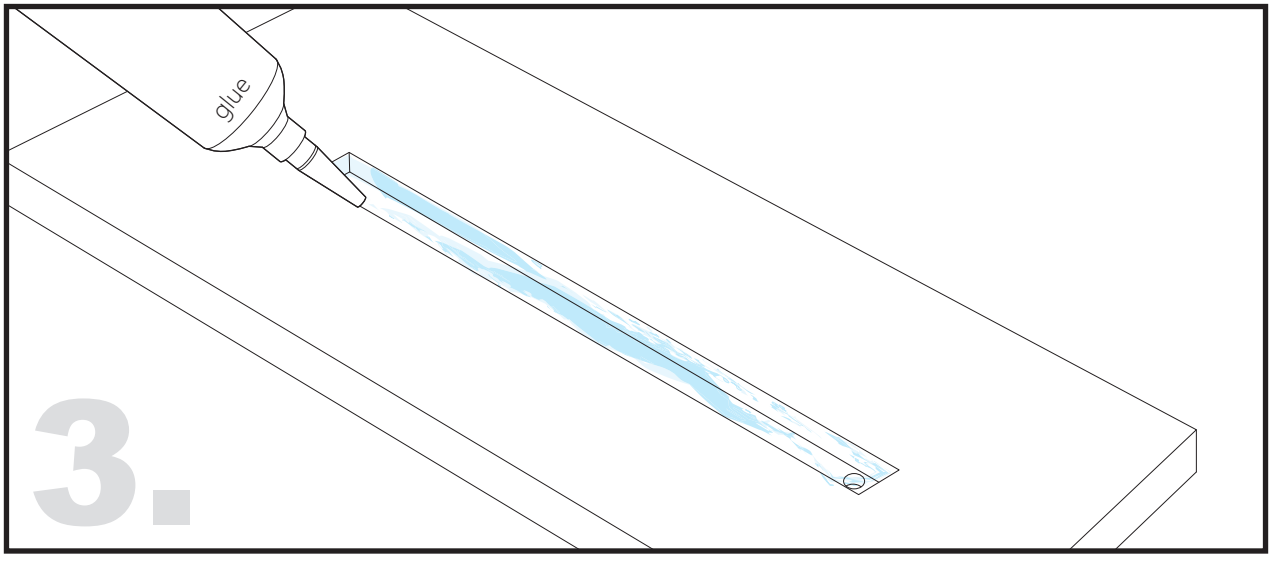

LEDWIDE
LEDWIDE LIGHTING CO.,LTD

Tel: 0086 755 29362351 Direct: 0086 0 18680360436
Fax: 86 755 29014058 E-mail: info@ledwide.com
www.ledwide.com
Address:1-2/F, Building A2,Sinopol Ind.Park, First Industrial Zone, BaiHua communities, Guangming New District, Shenzhen, P.R. China Postcode: 518107

Recessed

RECESSED INSTALLING INSTRUCTIONS

