序号/RevNo.	更改记录/Revision note	签名/Signature	日期/Date

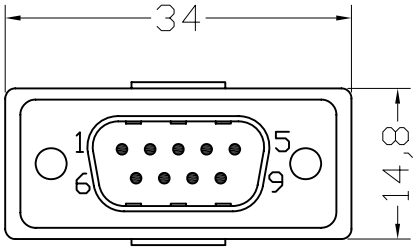

DB9M

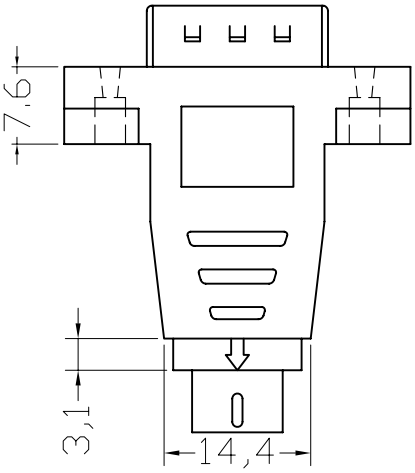

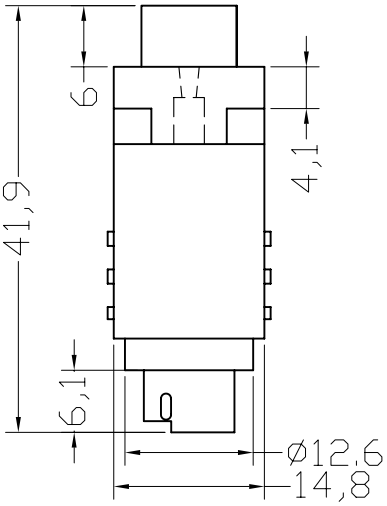

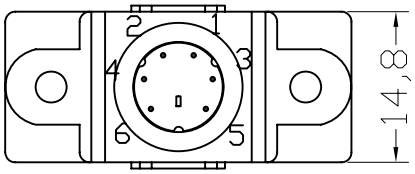

MD6M

设计/Designed by	绘图/Drawing by	审核/Checked by	批准/Approved by	未注公差 General Tolerance
				x. ± 0.2 x.° ± 2°
新莱亚电子 XINLAIYA ELECTRONIC CO.,LTD		图名/File name	文件编号/File No.	.x ± 0.1 .x° ± 1°
		DB9M/MD6M转接头	QJ/XYT-31051	.xx ± 0.05 .xx° ± 0.5°
			页序/Sheet	.xxx ± 0.01
		备注/Remark		单位/Units: mm