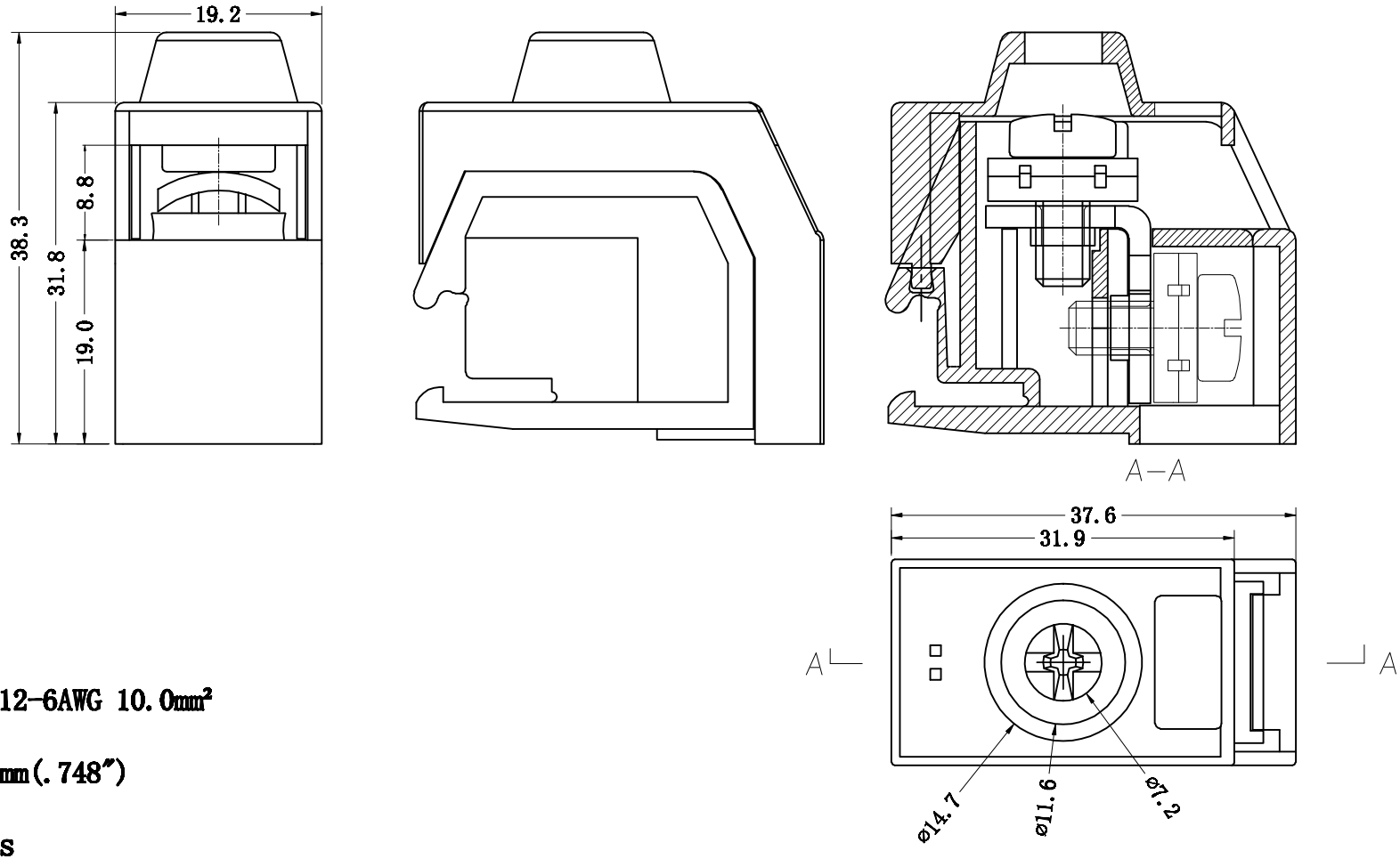

300V 55A 12-6AWG 10.0mm²
Poles: 1P
Pitch: 19mm(.748")

Materials

Housing: PA66(UL 94V-0)
Contact: Copper, Tin Plated
Screw: M5, Steel, Cr3+ Zinc Plated
Torque: 2.0N.m

设计/Designed by	绘图/Drawing by	审核/Checked by	批准/Approved by	未注公差 General Tolerance	
				x. ±0.2	x.° ±2°
		图名/File name	文件编号/File No.	.x ±0.1	.x° ±1°
新莱亚电子 XINLAIYA ELECTRONIC CO.,LTD		XY267		.xx ±0.05	.xx° ±0.5°
			页序/Sheet	.xxx ±0.01	
		备注 /Remark		单位/Units:	mm