直动式溢流阀 Directly Relief Valves
型号Model：JRD04-02

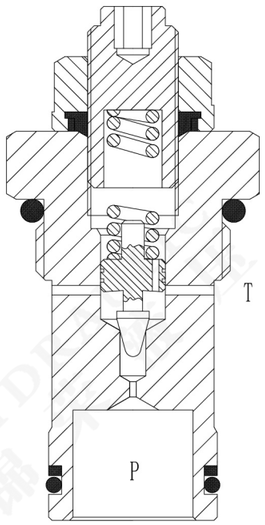

描述Description

螺纹插装、直动型、座阀式溢流阀，用作限压装置以保护液压回路。
Threaded plug-in, direct-acting and seat-valve overflow valve is used as a pressure limiting device to protect the hydraulic circuit.

工作原理Operation

当P口压力未达到弹簧设定压力的80%时，P到T不通，超过80%并压力继续升高时，P到T开始溢流，至弹簧的最高设定压力。
When the pressure at the P-port does not reach 80% of the set pressure of the spring, P-to-T is blocked; when it exceeds 80% and the pressure continues to rise, P-to-T begins to overflow to the highest set pressure of the spring.

特点Features

- 调节器确保弹簧不会被压实。
- 可选的可选压力范围达100bar（1450psi）。
- 阀芯和阀套硬质处理、耐用。
- 压力变化响应快。
- 工业常规阀孔。

- The regulator ensures that the spring will not be compacted.
- Optional optional pressure range up to 100bar(1450psi).
- The valve core and valve sleeve are hard to handle and durable.
- Fast response to pressure change.
- Industrial conventional valve hole.

符号Symbol

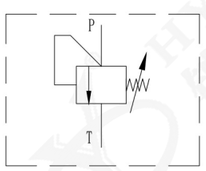

性能曲线Characteristic

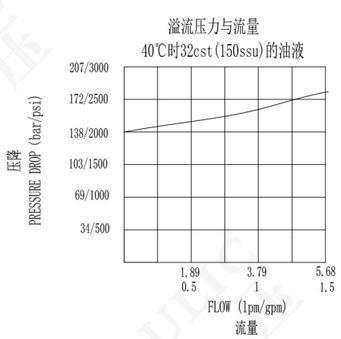

技术参数Specifications

最高工作压力：240bar（3480psi）
流量：参见性能曲线
内泄漏量：在75%的开启压力下，泄漏量≤10mL/min
开启压力定义：当流量达到公称流量的2.5%时的压力测量值bar
闭合压力：开启压力的90%
过滤精度：25μm
使用温度：-40℃～120℃（标准丁腈橡胶）
-26℃～204℃（氟橡胶）
介质：粘度介于7.4～420cSt（50-2000）ssu的矿物油或具有润滑作用的合成油
标准压力范围：140～240bar（2030～3480psi）

Max.Working Pressure:240bar（3480psi）
Flow:See performance curve.
Internal leakage:Under the opening pressure of 75%, the leakage is ≤10mL/min.
Opening Pressure Definition:Pressure measurement when the flow reaches 2.5% of the nominal flow.
Clossing Pressure:90% of opening pressure
Filtering Accuracy:25μm.
Service Temperature:-40℃~120℃(NBR),-26℃~204℃(FKM)
Medium:Mineral oil with viscosity of 7.4～420 CST (50-2000) ssu or synthetic oil with lubricating function.
Standard Pressure Range:140～240 bar (2030～3480 psi)

安装尺寸Dimensions

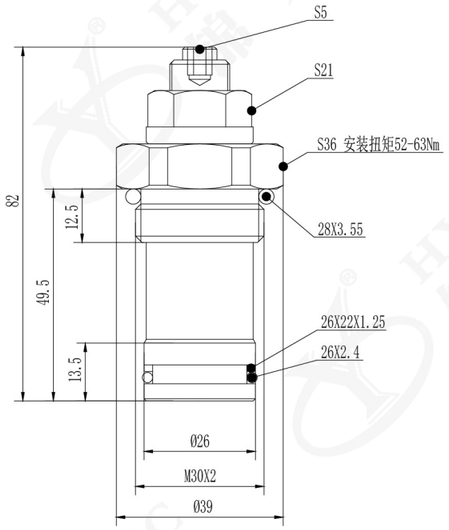

插孔Cavity

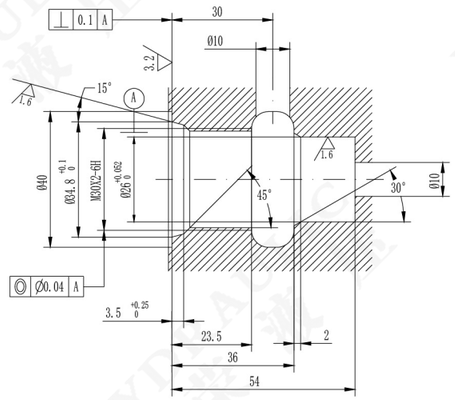

订购选型To Order

JRD04-02- ✱ - ✱ / ✱✱✱ - ✱

1 2 3 4 5

1 型号Model
JRD = 直动式溢流阀
Directly Relief Valves

2 调节选件Control
L = 螺杆Screw
C = 防调Anti-adjustment
K = 调扭Torque Adjustment
F = 六角头锁钮
Hexagon Lock Button
O = 螺杆封盖Screw Cap

3 弹弹簧调压范围Spring Ranges
A = 140～240bar
（2030～3480psi）

4 调定压力Setting In Bar
可调节或指定压力，例如：
190=190bar
170=170bar
The pressure can be adjusted or specified,Example:
190=190bar
170=170bar

5 密封件Seal Kits
N = 丁腈橡胶(NBR)
V = 氟橡胶(FKM))