多路换向阀 Multiple Directional Control Valves
型号Model：DL20A.3FD

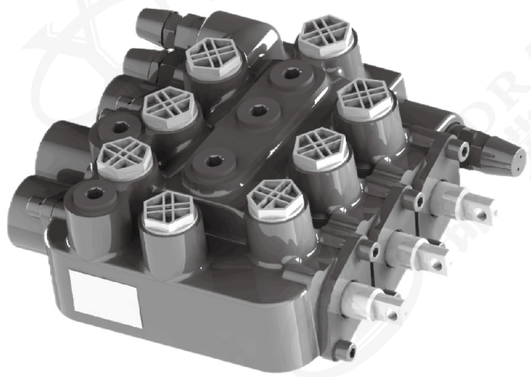

产品特点Product Features

1、控制方式：手控 1.Control Mode:Control Manually
2、回路形式：串联回路 2.Loop Form:Series Circuit
3、密封性好 3.Good Sealing Performance
4、溢流阀、过载阀等采用插装式结构 4.Overflow Valve And Overload Valve Adopt Plug-in Structure.
5、结构紧凑、压力损失小 5.Compact Structure And Small Pressure Loss.
6、通用性好，便于维修 6.Good Universality And Easy Maintenance.

液压原理图Hydraulic Schematic Diagram

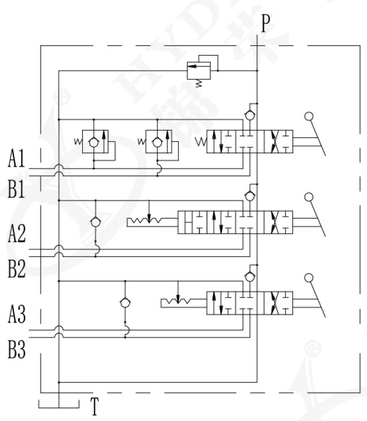

技术参数Specifications

概述Summary（DL20A.3FD）		
油口连接方式Oil Port Connection Mode		螺纹连接Threaded Connection
控制方式Control Mode		压力控制Pressure Control
安装方式Installation Mode		见外形图See Outline Drawing.
通径latus Rectum	mm	20
液压Hydraulic Pressure		
公称流量Nominal Flow Rate	L/min	100
允许最大回油背压 Maximum Allowable Oil Return Back Pressure	bar	15
液压油温度范围 Hydraulic Oil Temperature Range	℃	-20 ~ +100
粘度范围Viscosity Range	㎡/s	10~460
油液允许的污染等级 Permissible Pollution Level Of Oil		-/19/16（ISO4406:1999）
机械Machinery		
重量Weight	kg	20
阀芯允许的最大操作力 Maximum Operating Force Allowed By Valve Core	N	300
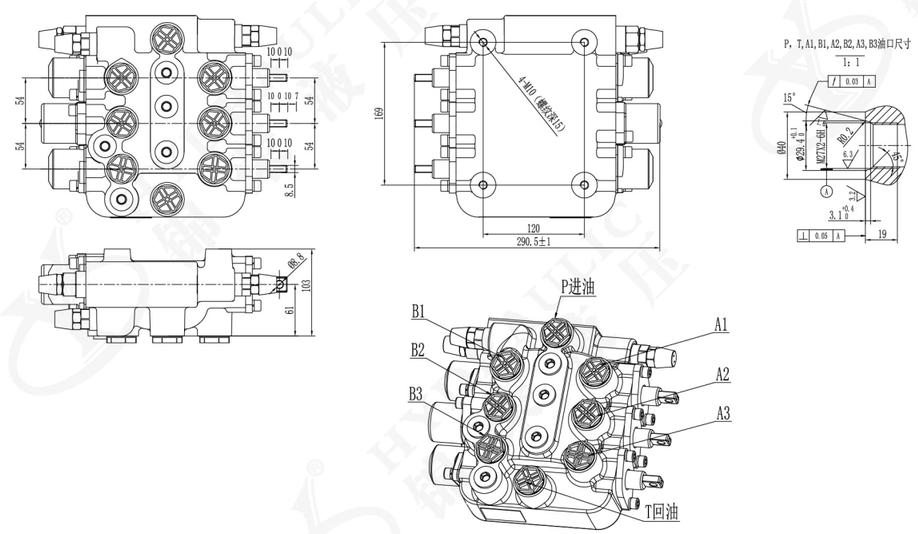
产品外形图Product Outline Drawing