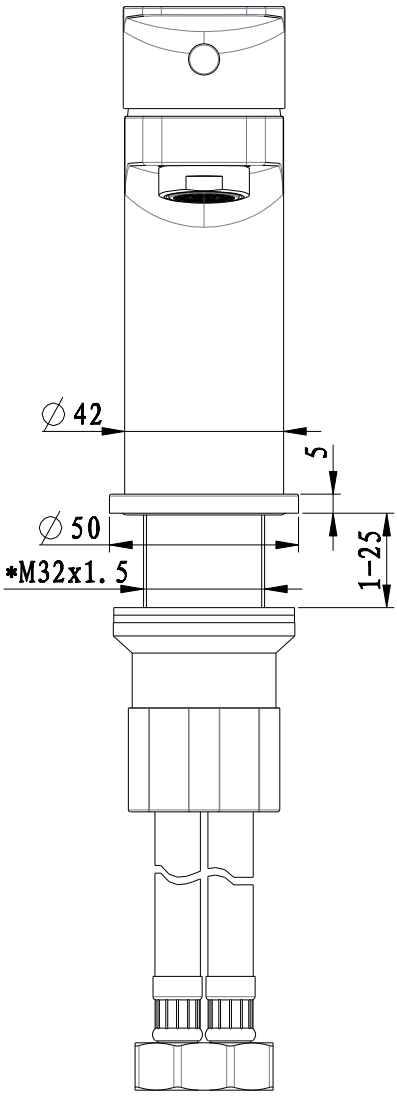
∅42
5
∅50
*M32x1.5
1-25

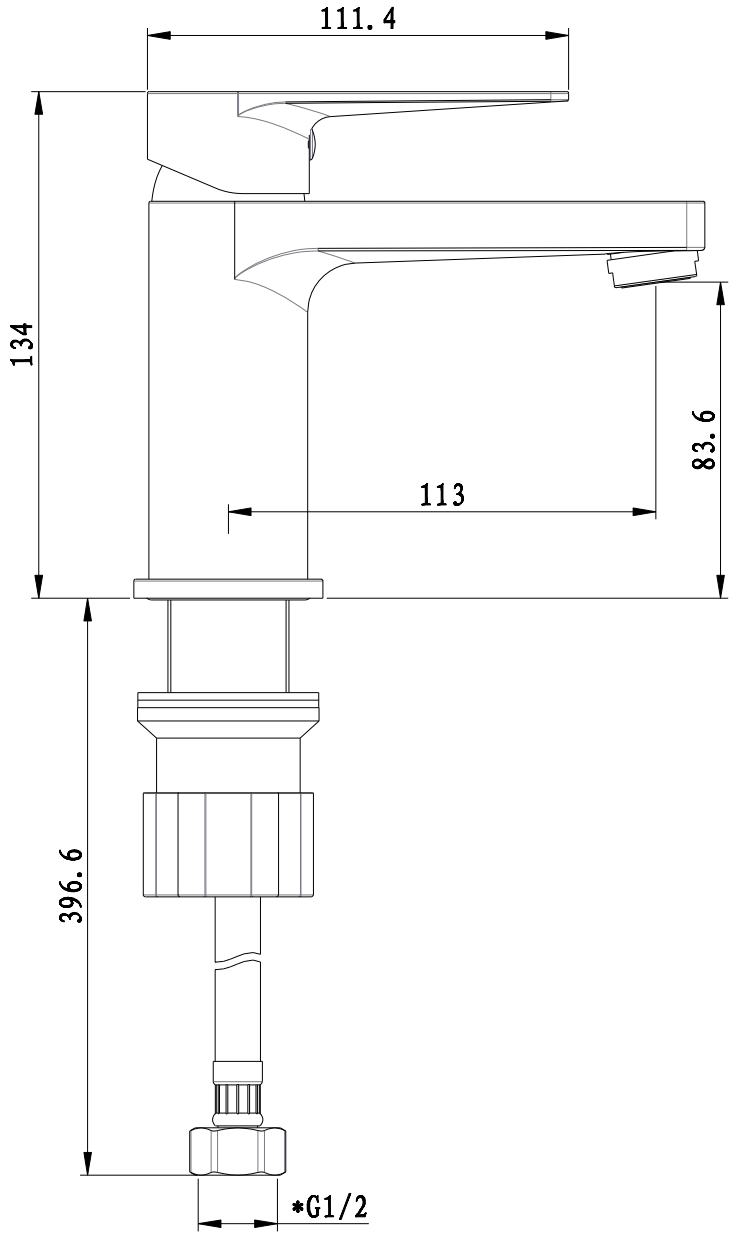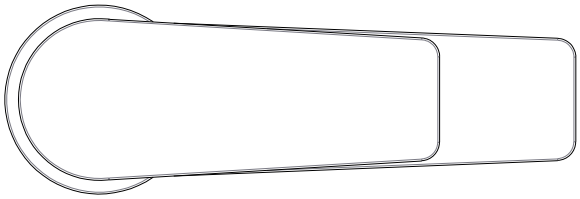
111.4
134
83.6
113
396.6
*G1/2