HIGOLD®

HIGOLD PVD BLACK NANO SINK SERIES

New Technology for Better Life

HIGOLD®

NANO Coating
For Anti-scratch

Handcraft
For Integration

210MM Deep
For Bigger Space

Multiple Drainage
For Deodorization

SUS304 Faucet
For Anti-rust

Topmount or Undermount
Optional Installation

New Technology for Kitchen Cleaning
Easy Cleaning, Wear Resistance, Anti-scratch

NANO Coating Film on Sink Surface For Easy Cleaning

HIGOLD®

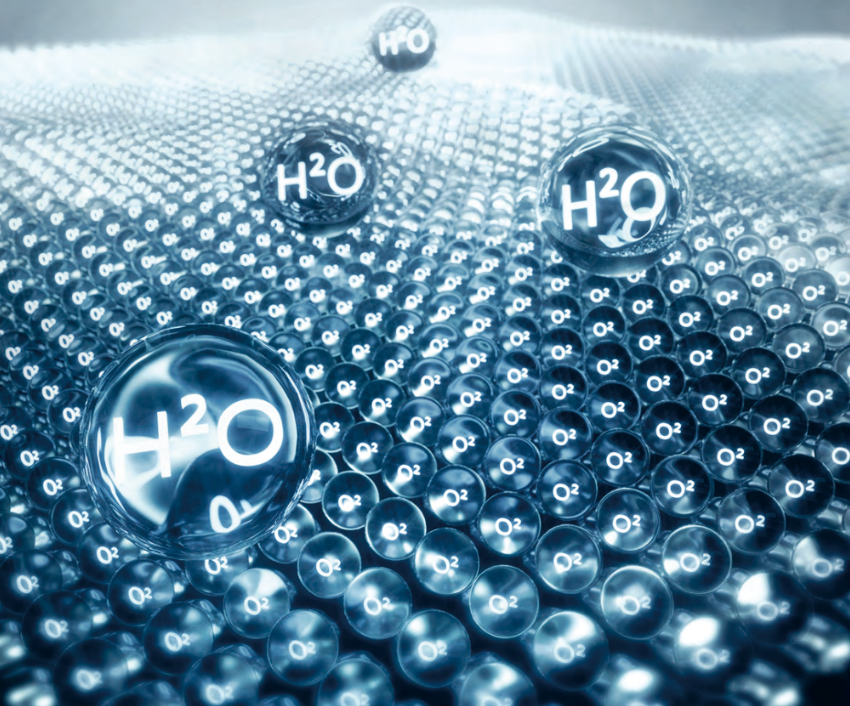

Incorruptible to Normal
Acid Base

Easy Cleaning for
Greasy Dirt

NANO Coating Film on Sink Surface
For Wear Resistance

HIGOLD®

NANO Coating Film on Sink Surface

For Anti-scratch

HIGOLD®

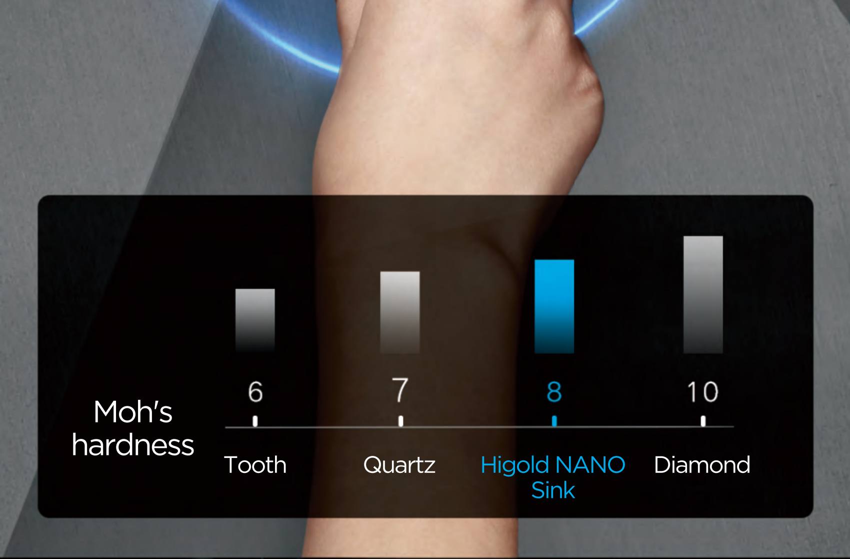

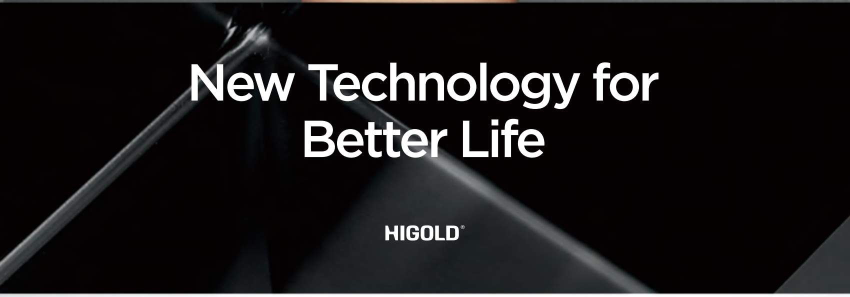

New Technology for Better Life

HIGOLD®

Handcraft for Integration
High Quality for Long

Time Use

HIGOLD®

Stainless steel
meinaite
inch/mm
OFF
ON
ZERO
3.00 mm

3MM Thick Panel

Single Bowl with Large Space

HIGOLD®

68cm	45cm	21cm	R10
Long	Wide	Deep	Round Corner

Double Bowl for Easy Partition

HIGOLD®

410X400mm
Left Bowl Size

318X350mm
Right Bowl Size

Big Volume Drainage System Tightly sealed without dripping or leakage

HIGOLD®

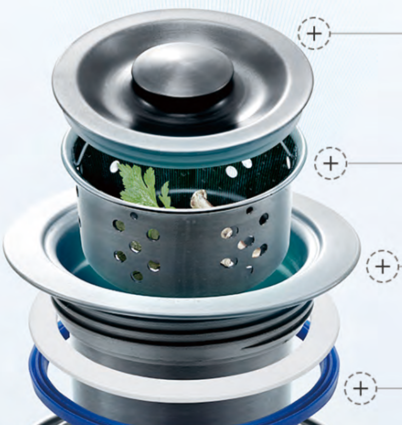

Stainless Steel 304
Sealed Cap

Stainless Steel 304
Basket

Stainless Steel 304
Shell

Anti-aging Seal
Ring

PP Antiseptic Shell

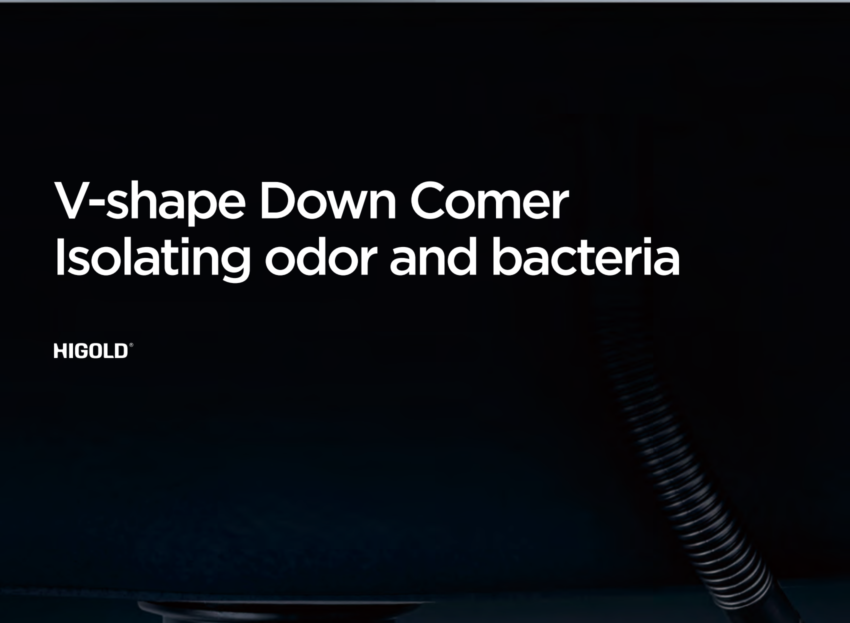

V-shape Down Comer Isolating odor and bacteria

HIGOLD®

High Quality SUS304 Faucet

Lead-free and anti-rust, cold and hot water for option, offering you best kitchen experience

HIGOLD®

- Black Electrophoresis Technology
- Lead-free for Environmental Protection
- 360° Rotation
- Cold / Hot Water

Extending Colander

Flexible size for easy washing and draining

HIGOLD®

37cm before extending

57cm after extending

Considerate Details for Supreme Experience

HIGOLD®

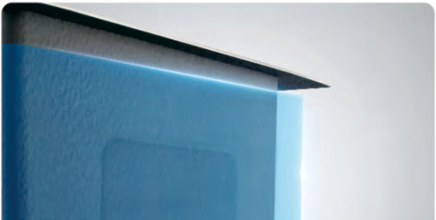

01

Anti-condensation Coating

Protecting the cabinet against mildew

02

Soundproof Pad

Reducing noise caused by water flow

03

Overflow Hole (Optional)

Allowing occasional negligence

04

Spare Hole

For soap dispenser or purification faucet

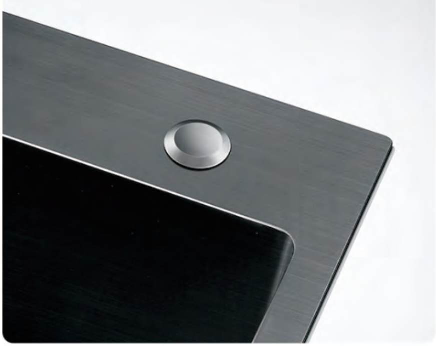

Topmount or Undermount Installation
It's totally up to you!

HIGOLD®

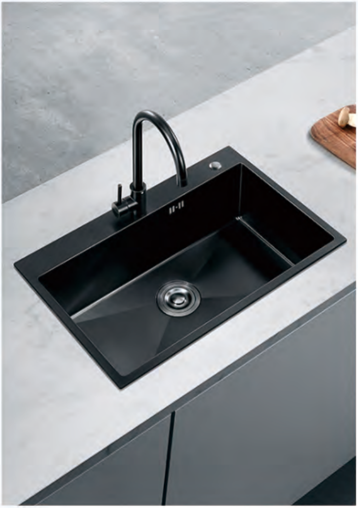

Topmount
Installation

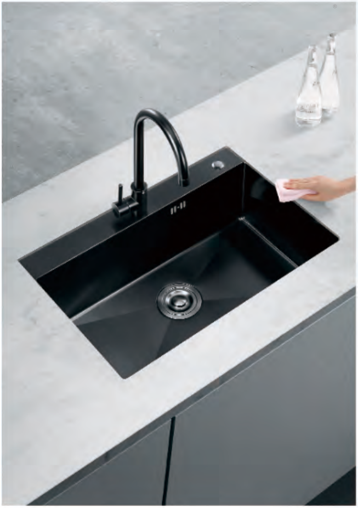

Undermount
Installation

Product List

PVD Black + NANO
Single Bowl Sink

Colander

SUS304 Cold/Hot
Water Faucet

Drainage
Pipe

Drainer

PVD Black + NANO
Double Bowl Sink

Colander

SUS304 Cold/Hot Water Faucet

Drainage Pipe

Drainer

Product Parameters

HIGOLD®

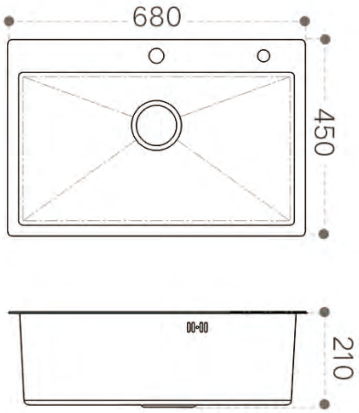

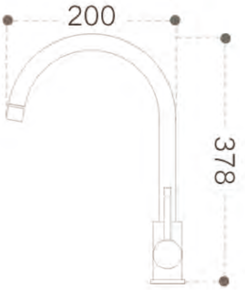

Product Name: PVD Black + NANO Single Bowl Sink

Main Material: Stainless Steel 304

Technology: PVD & NANO Coating

R Corner: R10 **Item No.:** 952200 **Panel Thick:** 3mm

Faucet Hole Diameter: 35mm

Other Hole Diameter: 28mm

Product Size	Topmount Cutout Size	Undermount Cutout Size
Length: 680 Width: 450 Height: 210	Length: 660 Width: 430	Length: 630 Width: 415

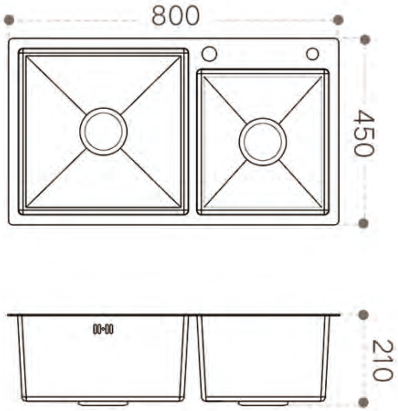

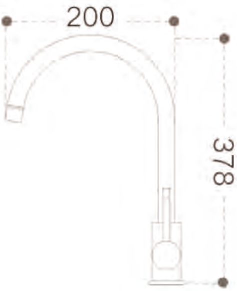

Product Name: PVD Black + NANO Double Bowl Sink

Main Material: Stainless Steel 304

Technology: PVD & NANO Coating

R Corner: R10 **Item No.:** 953388 **Panel Thick:** 3mm

Faucet Hole Diameter: 35mm

Other Hole Diameter: 28mm

Product Size	Topmount Cutout Size	Undermount Cutout Size
Length: 800 Width: 450 Height: 210	Length: 780 Width: 430	Length: 750 Width: 415

⁎ Unit: mm