HIGOLD®

The Emperor sink who competes for the peak

The more you use, the newer it is,
superior to all other quartz sink

10 Years Warranty

Born for classic inheritance

Satisfy any imagination of quartz sink.

HIGOLD®

Good-looking
The more you use,
the newer it is

No fading
High temperature resistance
and anti-scratch

No air holes
High strength and
impact resistance

Food grade
FDA agency
approval

Fast draining
High
flatness

Easy cleaning
One wipe, oily stains
are all gone

The more you use, the newer it is, stable quality makes your kitchen enduringly beautiful

Returning to the beauty essence of quartz sink,
Giving the beauty of the kitchen without fading.

HIGOLD®

Tiny air hole, big breakthrough Questions are welcome to identify the truth

HIGOLD®

HOW TO IDENTIFY HIGH QUALITY QUARTZ SINK?

Mr.Question

BOSS, IS THERE ANY AIR HOLE IN YOUR QUARTZ SINK?

Customer service

NO, A GOOD SINK DOESN'T HAVE ANY TINY AIR HOLE

Mr.Question

BUT WHY OTHER FACTORIES SAID IT'S NORMAL TO HAVE TINY AIR HOLES?

Customer service

THE AIR HOLE CRACK AT THE BOTTOM OF THE SINK WILL BECOME A HIDDEN DANGER TO THE CRACKING OF THE SINK

No tiny air hole

Big industrial breakthrough

High strength

Stronger and more durable

◀

Defective products

If the manufacturer said "it's normal to have tiny air hole", suggest you to give a full consideration on it.

High Hardness, Impact Resistance HIGOLD production standard, higher than international standard

No tiny air holes, no cracking hidden danger.
No matter full water loaded or the
impact from pots and pans, you can rest assured.

HIGOLD®

Impact test of solid steel ball

International Standard: 250g steel ball, 60cm high impact, no damage
HIGOLD Standard: 500g steel ball, 100 cm high impact, no damage

HIGOLD Quartz Sink

Impact resistant,
more durable

Defective products

No impact resistance,
potential risk of damage

Food grade materials without odor Agency approval by both FDA & National Standard

The production of quartz sink,
requires a certain amount of plastic to bond
quartz stone together.
Please refuse non-food grade materials,
which will bring great hidden danger to health.

HIGOLD®

Testing performance:

At the request of the applicant, please refer to the attached page for all details

Conclusion:

Testing sample	Standard	Conclusion
Submitted samples	GB 4806.7-2016 national food safety standard for food contact plastic materials and products, Chapter 4.2 sensory requirements and chapter 4.3 physical and chemical index requirements	qualified
	GB 4806.7-2016 national food safety standard for food contact plastic materials and products, Article 4.3.2 requirements on specific total migration limit of formaldehyde	qualified
	GB 4806.7-2016 national food safety standard for food contact plastic materials and products, Article 4.3.2 determination of migration of 2,4,6-triamino-1,3,5-triazine (melamine)	qualified

No dyeing, no odor

No formaldehyde

No melamine

intertek
Total Quality. Assured.

Test Report Report No.: 200824020GZU-001 Date: Sep 3, 2020

DRAFT

1. Test for F.D.A. Regulation on Melamine-Formaldehyde Resins

As per the U.S. Food and Drug Administration 21 CFR Part 177.1460 Clause (c).

I. Condition of use

A. Room temperature filled and stored (No thermal treatment in the container

II. Result

Test item	Result (1)	Reporting limit	Limit
Chloroform soluble extractive in water extractant, mg/in²	ND	0.10	0.5
Chloroform soluble extractive in heptane extractant, mg/in²	ND	0.10	0.5
Chloroform soluble extractive in 8% alcohol extractant, mg/in²	ND	0.10	0.5

ND = Not Detected

Test Component:

(1) Black melamine plastic

Page 2 of 3

Intertek Testing Services Shenzhen Ltd. Guangzhou Branch
Room 02, 1-8F & Room 01,101/E201/E301/E401/E501/E601/E701/E801, No.7-2, Caipin Road, Science City, GETDD, Guangzhou, Guangdong, China.
Tel: (86-20) 8213 9668 Fax: (86-20) 32057538 Website: www.intertek.com

GZ-EE-CHEM-R-01 (2020-01-01, version 3.1) © 2020 Intertek

intertek
Total Quality. Assured.

测试报告 报告编号: 200824020GZU-004 日期: 2020 年 9 月 11 日

申请人: 佛山市顺德区伟高五金制品有限公司

佛山市顺德区杏坛镇顺业东路 36 号之一

样品描述:
以下测试样品由申请单位所提供及确认:

样品名称 : 中华瓷石英水槽
型号 : WYG-012-68-48-21.5
样品接收日期 : 2020 年 8 月 24 日 和 2020 年 9 月 3 日
测试周期 : 2020 年 8 月 24 日 至 2020 年 9 月 3 日 和 2020 年 9 月 3 日 至 2020 年 9 月 11 日

所执行的测试:
按申请人的要求。所有细节请参看附页

结论:

测试样品	标准	结论
送检样品	GB 4806.7-2016 食品安全国家标准食品接触用塑料材料及制品的 4.2 感官要求和 4.3 理化指标要求	合格
	GB 4806.7-2016 食品安全国家标准食品接触用塑料材料及制品 条款 4.3.2 对甲醛特定迁移总量限量的要求	合格
	GB 4806.7-2016 食品安全国家标准食品接触用塑料材料及制品条款 4.3.2 对 2,4,6-三氨基-1,3,5-三嗪(三聚氰胺)特定迁移限量的要求	合格

深圳天祥质量技术服务有限公司广州分公司:

报告准备: 报告审核:

杨嘉杰 技术主管 周北林 主管

Page 1 of 4

深圳天祥质量技术服务有限公司广州分公司
广东省广州经济技术开发区科学城彩频路 7 号之二第 1-8 层
02 层、01 层 101、E201、E301、E401、E501、E601、E701、E801
Tel: (86-20) 82139668 Fax: (86-20) 32057538 网址: www.intertek.com

GZ-EE-CHEM-R-02 (2020-01-01, version 3.1) © 2020 Intertek

No odor no discoloration in high temperature Easy to wipe and clean

HIGOLD®

High temperature resistance | Anti acid and alkali corrosion

Anti greasy adsorption

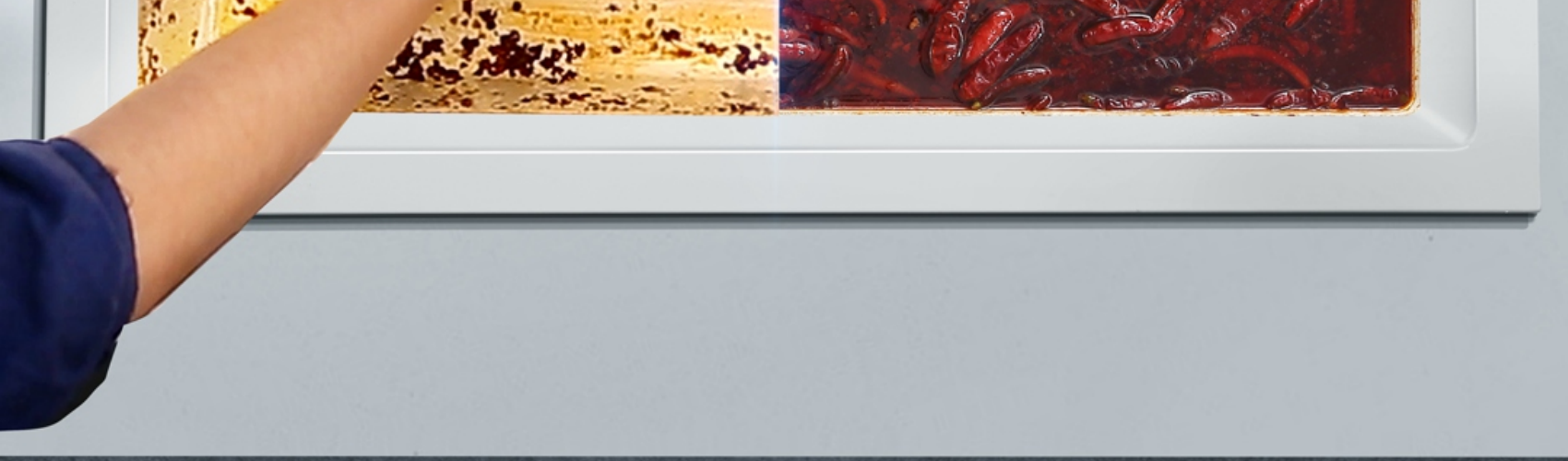

Tips: This test requires using the electric heating rod, if need to do it, please make sure you are under good protection

Anti-Scratch, Enduringly New The more you use, the newer it will be

The surface color is not a coating, the material goes all the way through, from outside to inside, every cutting surface is in a unified color, that makes your quartz sink bowl as enduringly beautiful as it was on the day you got it.

HIGOLD®

HIGOLD Quartz Sink

Anti-scratch, the material goes all the way through

Defective products

Easy to scratch, internal white

The four corners are flat
Well matched with countertop

The quartz sink is stamped by high temperature, the inferior technology may lead to cooling shrinkage of the sink, which will increase the size tolerance and corner bending, the sink cannot well-matched with countertop.

HIGOLD®

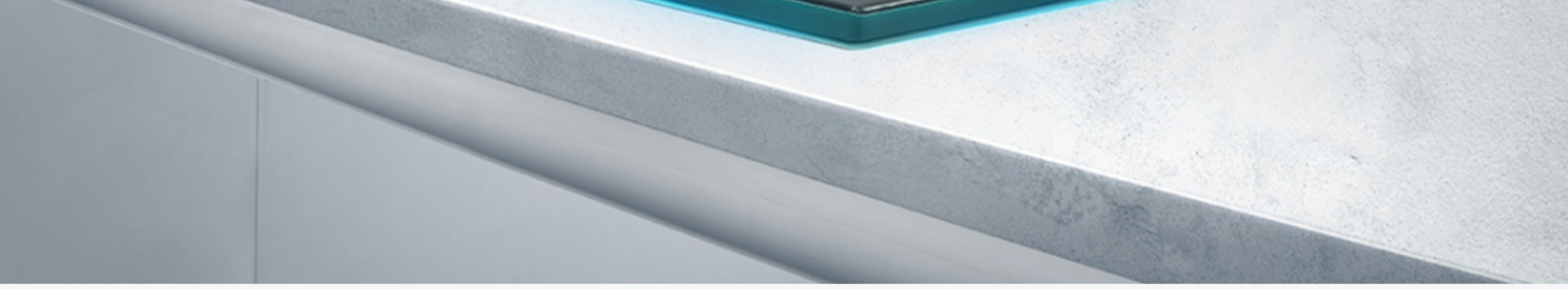

◀

Defective products

Big gap, leakage
Uneven stress
esthetic effection

SUS 304 Stainless Steel Pull-Out Faucet Easily wash every corner of the sink

SUS 304 stainless steel with pearl enamel baking process, amazing looking and comfortable touching Easy to clean the oily stains on the pots and dishes, giving you a different experience.

HIGOLD
得高HIGOLD

Bubble water

Shower water

Multiple filtration drainage
Fast and smooth drainage

Dual filter design, easy to block residue,
fast drainage.

HIGOLD®

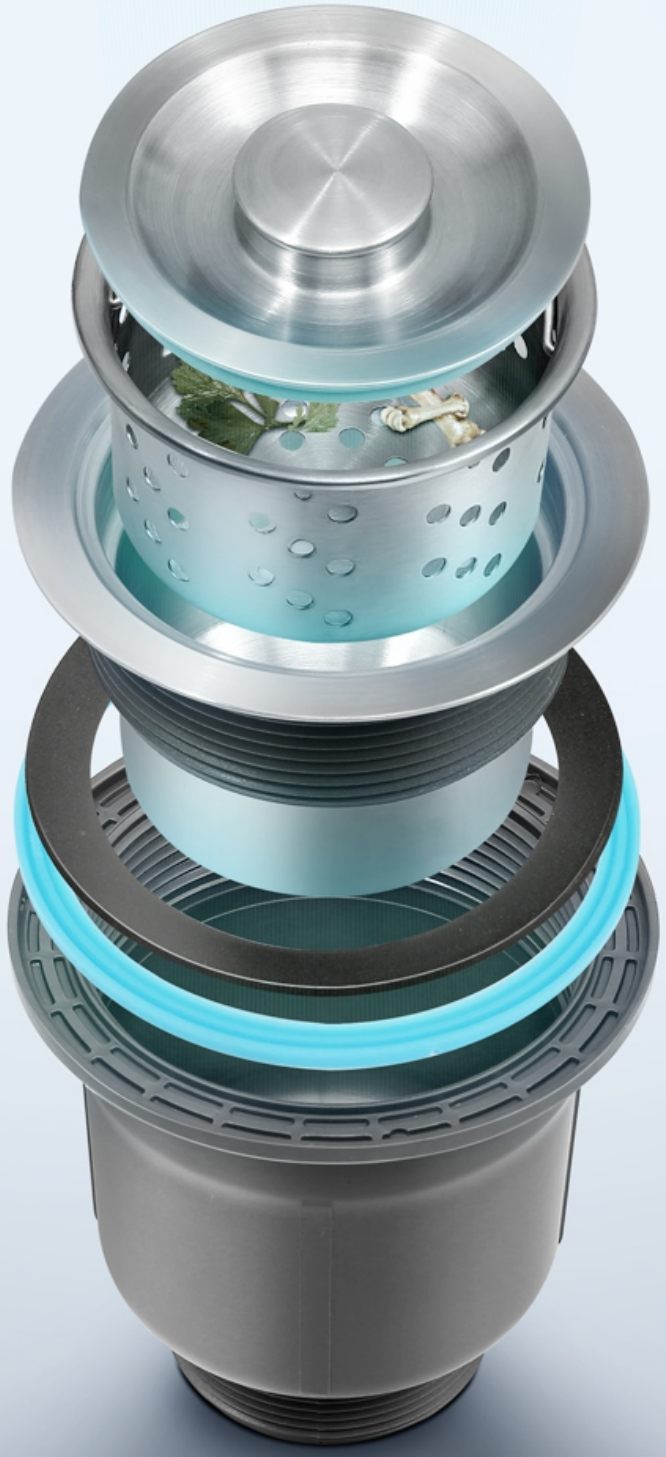

SUS 304 stainless steel
Water storage seal cover

SUS 304 stainless steel
waste basket

SUS 304 stainless steel
shell

Anti-aging seal ring

PP Anticorrosive shell

Rear water system Gives you more storage space

Prevent the drainage pipes to take up more space under the countertop and make better use of the cabinet in your kitchen.

HIGOLD®

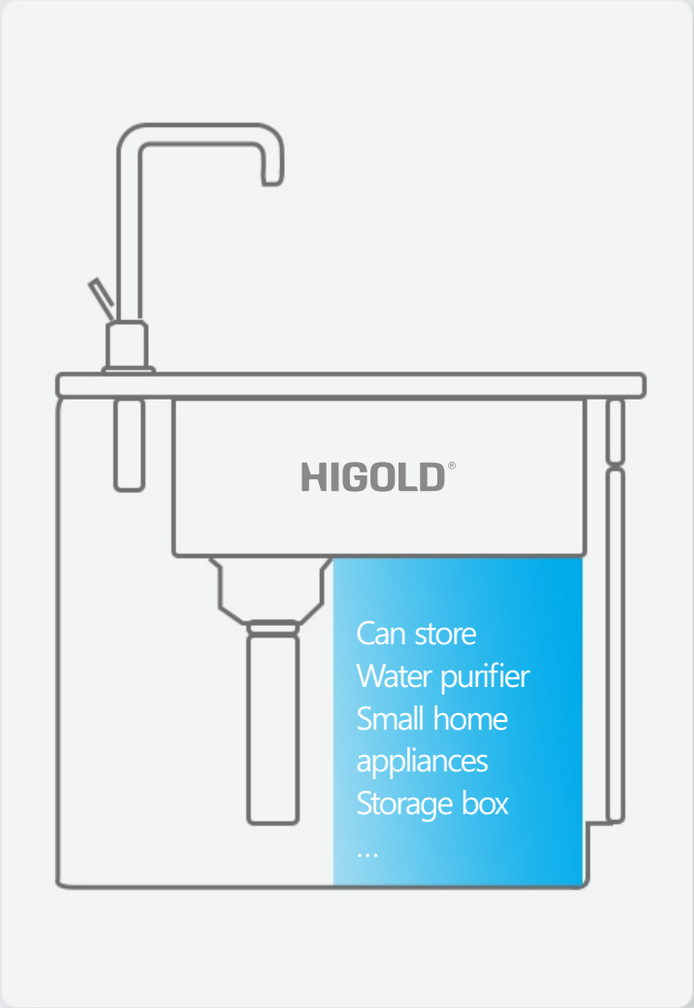

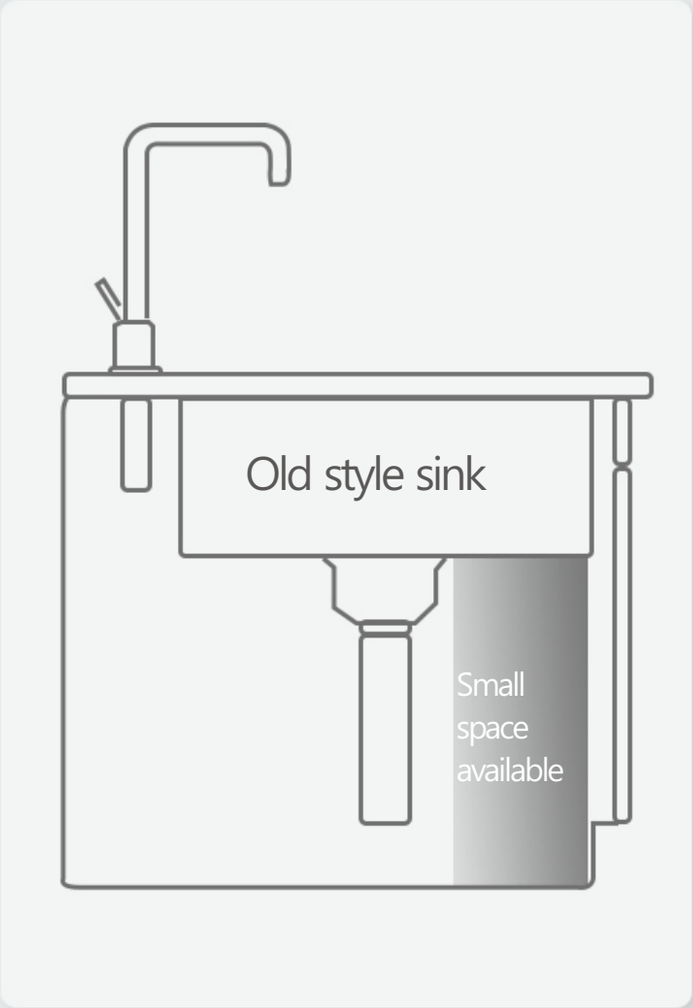

Can install garbage disposal, no worries about garbage sorting

Can match the installation requirements of garbage disposal, enjoy your new cleaning kitchen.

HIGOLD®

Free installation
Topmount or undermount, install it as you like

HIGOLD®

Topmount Installation

Easy to install,
easy to replace

Undermount Installation

Looking beautiful,
easy to clean countertop

Meticulous, focus on every detail

HIGOLD®

01

Adjustable colander

The dishes can be drained vertically

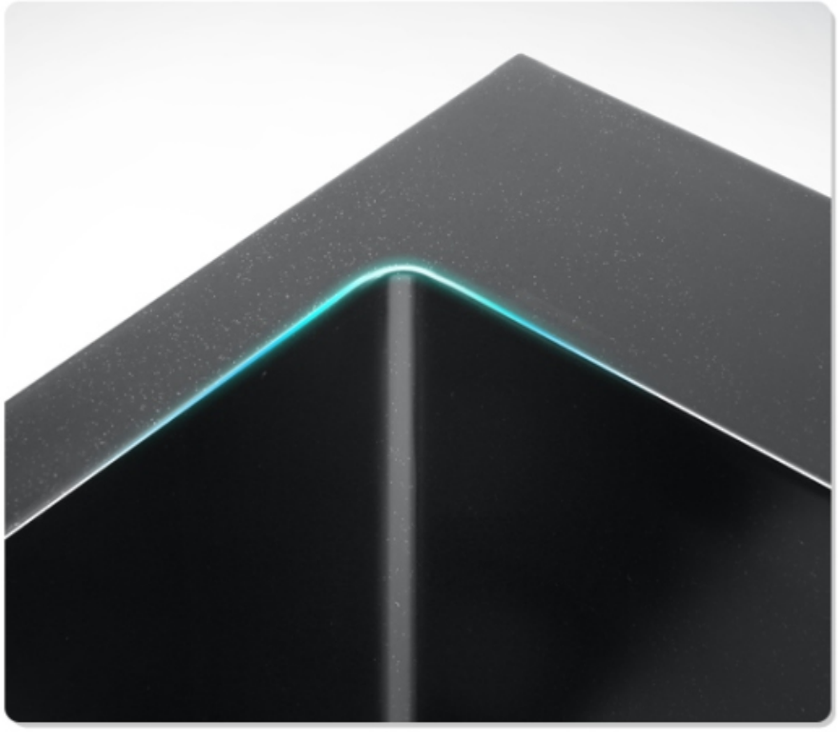

02

Small Radius design

Further expand the sink space

03

Overflow hole design

No flood in the kitchen

Sharply Black set

HIGOLD®

Product List

HIGOLD®

Quartz Sink

Colander

Drainer

Pull-out
Faucet

Purify Faucet
(Option)

Drainage pipe
(Option)

Snow White Set

HIGOLD®

Product List

HIGOLD®

Quartz Sink

Colander

Drainer

Pull-out Faucet

Purify Faucet (Option)

Drainage pipe (Option)

Product Parameters

HIGOLD®

680

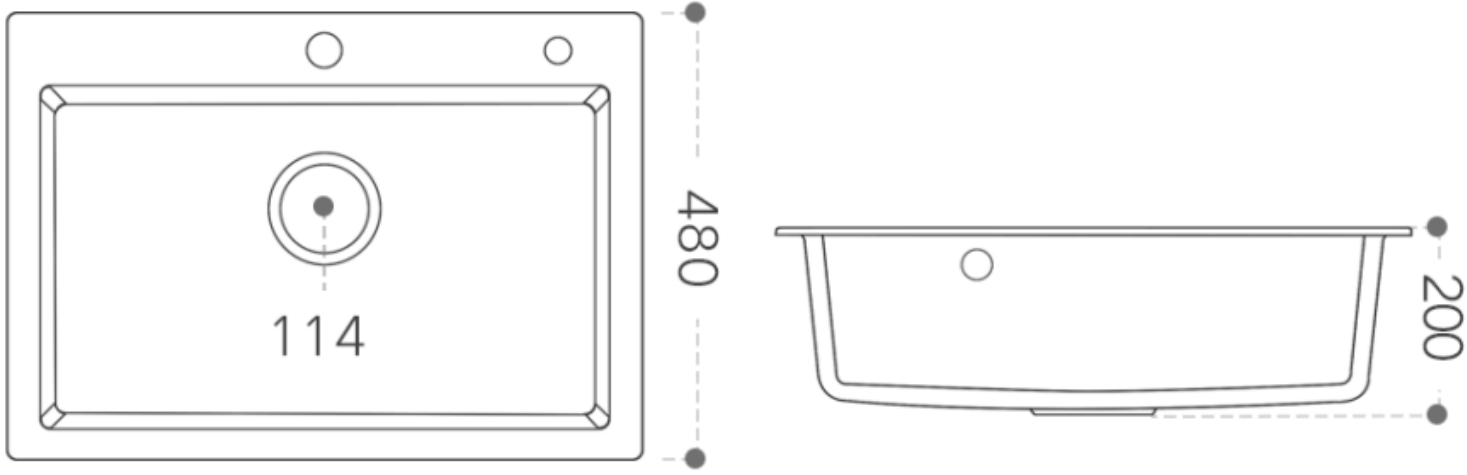

Product Name: Emperor Series Quartz Sink

Main Material: Quartz stone

Diameter of purify faucet hole: 28mm

Diameter of faucet hole: 35mm

Item No.: 930019T-C-3201 Color: Sharply Black

Item No.: 930019T-C-3101 Color: Snow White

Product Size	Bowl size
Length: 680 Width: 480 Height: 200	Length: 610 Width: 350

Topmount Cutout Size	Undermount Cutout Size
Length: 650 Width: 450	Length: 640 Width: 440 R Corner: R12

* Unit: mm Manual measurement, the exact size should refer to the real product