## Product Description

- Small Size
- Load Current: 10A or 20A
- 12VDC or 24VDC Input
- Internal RC/MOV Protection Circuit
- 3 Phase 2 Control, Internal Delay Circuit, Interlock Circuirt
- Output Connected with Wires
- RoHS Compliant

## Ordering Information

| KMB | 380 | D | 10 | -24 | (XXX) |
|---|---|---|---|---|---|
| KMB Series (1) | Load Voltage<br>380: 380VAC | D: DC Control | Load Current<br>10: 10Amp<br>20: 20Amp | Control Voltage<br>12: 12VDC<br>24: 24VDC | XXX:<br>Customized<br>Code |

Note (1): The part number selection is subject to the following list.

| Information | 10A | 20A |
|---|---|---|
| 12VDC | KMB380D10-12 | KMB380D20-12 |
| 24VDC | KMB380D10-24 | KMB380D20-24 |

## General Specifications

| Input Specifications (Ta=25℃) | | |
|---|---|---|
| Control Voltage Range | -12 | 9.6-14.4VDC |
| | -24 | 19.2-28.8VDC |
| Must Turn-on Voltage | -12 | 9.6VDC |
| | -24 | 19.2VDC |
| Must Turn-off Voltage | 2VDC | |
| Maximum Input Current | 15mA | |

| Output Specifications (Ta=25℃) | | |
|---|---|---|
| Load Voltage Range | 24-440VAC | |
| Maximum Transient Overvoltage | 800Vpk | |
| Minimum Load Current | 100mA | |
| Minimum Delay Turn-on Time | 40ms | |
| Maximum Turn-off Time | 20ms | |
| Maximum 1 Cycle Surge Current (50Hz) | 10A | 100A |
| | 20A | 200A |
| Maximum Off-State Leakage Current@Rated Load Voltage | 5mA | |
| Maximum On-State Voltage Drop@Rated Current | 1.5Vrms | |
| Minimum Off-State dv/dt@Maximum Rated Voltage | 200V/μs | |

| General Specifications (Ta=25℃) | | |
|---|---|---|
| Dielectric Strength (50/60Hz) | Input/Output | 4000Vrms |
| | Input, output/Base | 2500Vrms |
| Minimum Insulation Resistance (@500VDC) | 1000MΩ | |
| Ambient Temperature Range | -30℃ ~ +80℃ | |
| Storage Temperature Range | -30℃ ~ +100℃ | |
| Pulse Immunity level | IEC61000-4-4 | 2kV/100kHz |
| Surge Immunity level | IEC61000-4-5 | 2kV/common mould, 1kV/different mould |
| Electrostatic Discharge Immunity level | IEC61000-4-2 | 4kV/contact discharge, 8kV/air discharge |


*Copyright © 2020 Xiamen Kudom Electronics Technology Co.,Ltd.*

| General Specifications (Ta=25℃) | |
|---|---|
| Weight (Typical) | 130g |
| Working Status Indication | Forward:Green |
| | Reversion:Red |

## Applications

Three phase motor reversing control, such as electric actuator, transformer with onload voltage regulating, and etc.

## Outline Dimensions/Wiring Diagram

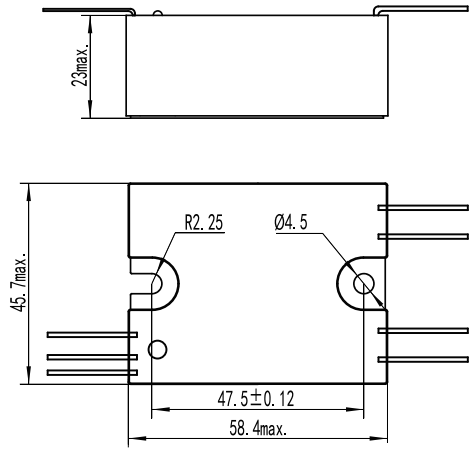


Outline Dimensions

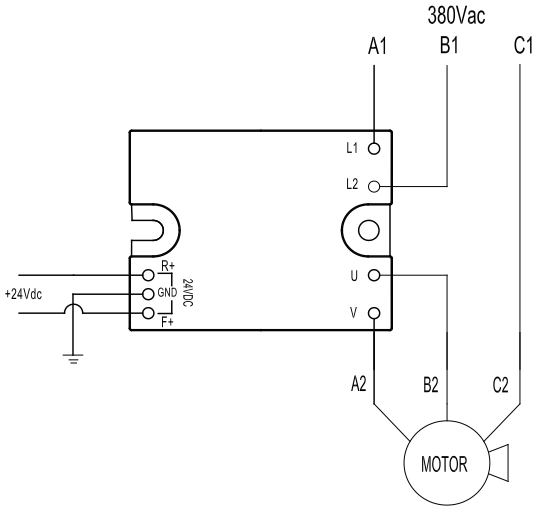


Wiring Diagram

## Thermal Derating Curve

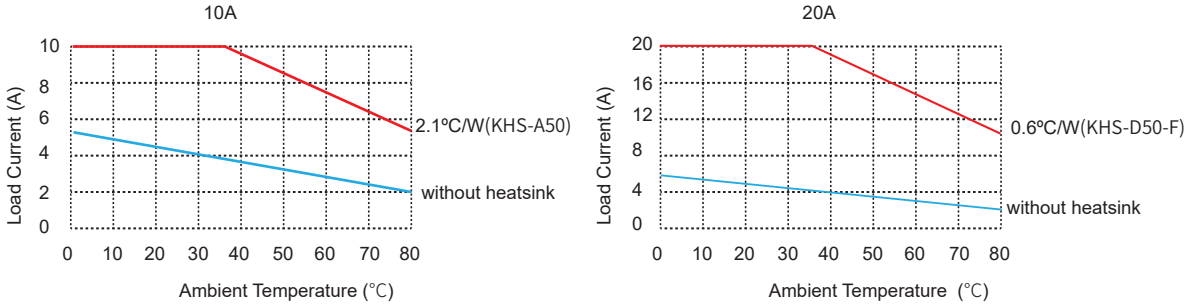


## General Notes

1.Please make sure the product can handle the surge current of the load.

2.Switching time must exceed 40ms.

3. When the operation temperature is high, please consider the derating as per the thermal curve.

4. Ensure the electrical grounding reliably during the use of the SSR.

 *Copyright © 2020 Xiamen Kudom Electronics Technology Co.,Ltd.*