由 Autodesk 教育版产品制作

版本	变更原因	日期	姓名

Diagram

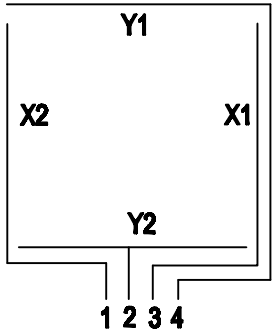

PIN #	Assignment
1	X2
2	Y2
3	X1
4	Y1

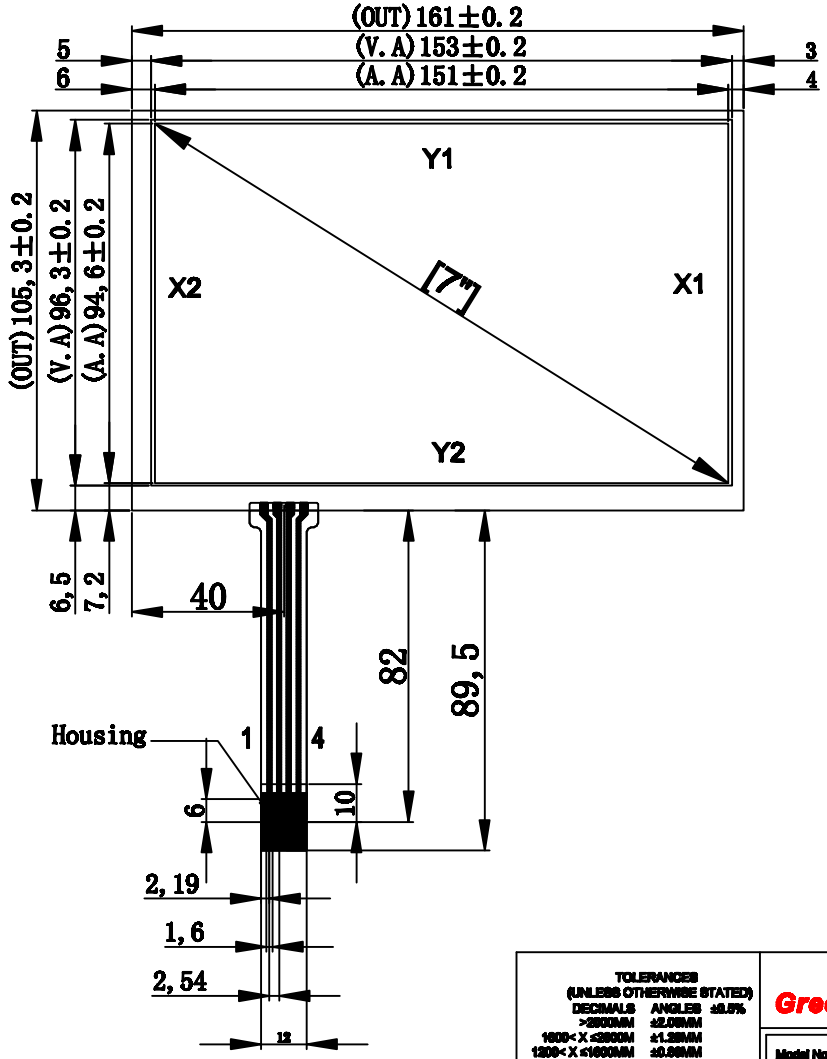

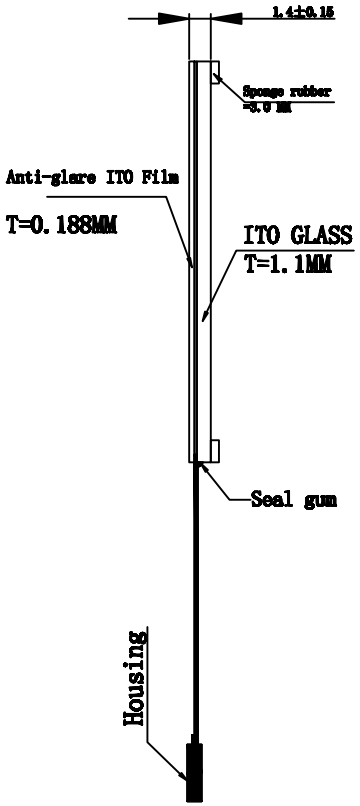

Notes:
1. Type:Film to Glass
2. Operating Voltage:≤10v
3. Operation Temperature:-10℃~60℃
   Storage Temperature:-20℃~70℃
4. Life Time:1.000.000 times
5. Connect Material:FPC
6. Response Time:≤10ms
7. Linearity:≤1.5%
8. Transmittance:≥75%
9. Surface Hardness≥3H(pencil)
10. Operation force:60g~150g
11. Resistance:X:450Ω-1100Ω Y:162Ω-396Ω

TOLERANCES (UNLESS OTHERWISE STATED)	
DECIMALS	ANGLES ±0.5%
>2000MM	±2.00MM
1600< X ≤2000M	±1.20MM
1200< X ≤1600MM	±0.80MM
800< X ≤1200MM	±0.50MM
400< X ≤800MM	±0.40MM
120< X ≤400MM	±0.30MM
30< X ≤120MM	±0.20MM
<30MM	±0.10MM

格林触控 GreenTouch®

Shenzhen GreenTouch Technology Co.,Ltd

Model No.:	GT-4W-7E-1	Size	7"	Ratio	16:9
Structure	G+F	Unit	mm	Scale	1:1
Design	李俊	Date	2015.8.5	Page	1/1
Check	付作市	Date	2015.8.5	Version	A0
Release	汪珠	Date	2015.8.5		

由 Autodesk 教育版产品制作
由 Autodesk 教育版产品制作
由 Autodesk 教育版产品制作